Reynolds
EQUIPMENT COMPANY

RECOR
323 LVC
Operators Manual
& Field Installation Guide

QSM400-LVC6

Reynolds Equipment Company
3233 W. Kingsley Rd.
Garland, Texas 75041
tel 469-429-5280 fax 469-429-5281
www.reynoldsequipment.com

Purpose of this "Quick Start Manual"

The RECOR 323 LVC is a powerful device that can be programmed in a variety of configurations. The purpose of this manual is to provide a quick reference for use in meter shop setup and field installations.

Table Of Contents

LOW VOLTAGE CORRECTOR (LVC) 1

EQUIPMENT REQUIRED 1

MOUNTING / INSTALLATION 2

MATCHING THE METER ROTATION ON HEAVY DUTY INDEX 2
METER MOUNTING 3
PRESSURE CONNECTION 4
TEMPERATURE PROBE INSTALLATION 4
GROUNDING 5
BATTERY PACK AND BACK-UP BATTERIES 6
EXTERNAL POWER 6
PULSE OUTPUTS 7
EXTERNAL MODEM 8
INTERNAL MODEM 8

HOST SELECTION 9

LVCHOST OPERATING SOFTWARE 1.22 (DOS VERSION) 9

SOFTWARE INSTALLATION 1.22 9
ONLINE HELP 1.22 10

LVCHOST OPERATING SOFTWARE 4.XX (WINDOWS VERSION) 10

SOFTWARE INSTALLATION 4.XX 11
ONLINE HELP 4.XX 11

RECOR LVC TROUBLESHOOTING 11

PERIODIC MAINTENANCE 13

SPARE PARTS/ACCESSORIES 14
CONFIGURATION WORKSHEET VERSION 1.XX 15
CONFIGURATION WORKSHEET VERSION 2.XX 17
OPTIONS AND ACCESSORIES FOR THE LVC UNIT 19

CLASS 1 DIVISION 1 FIELD DRAWING 20

CLASS 1 DIVISION 2 FIELD DRAWING 21

FACTORY CONSULTATION 22

Low Voltage Corrector (LVC)

The RECOR 323 LVC is a microprocessor based, self-contained system designed for the purpose of performing ideal gas law calculations using integral pressure, temperature and volume sensing devices. Figure 1 illustrates the placement of major components.

Figure 1

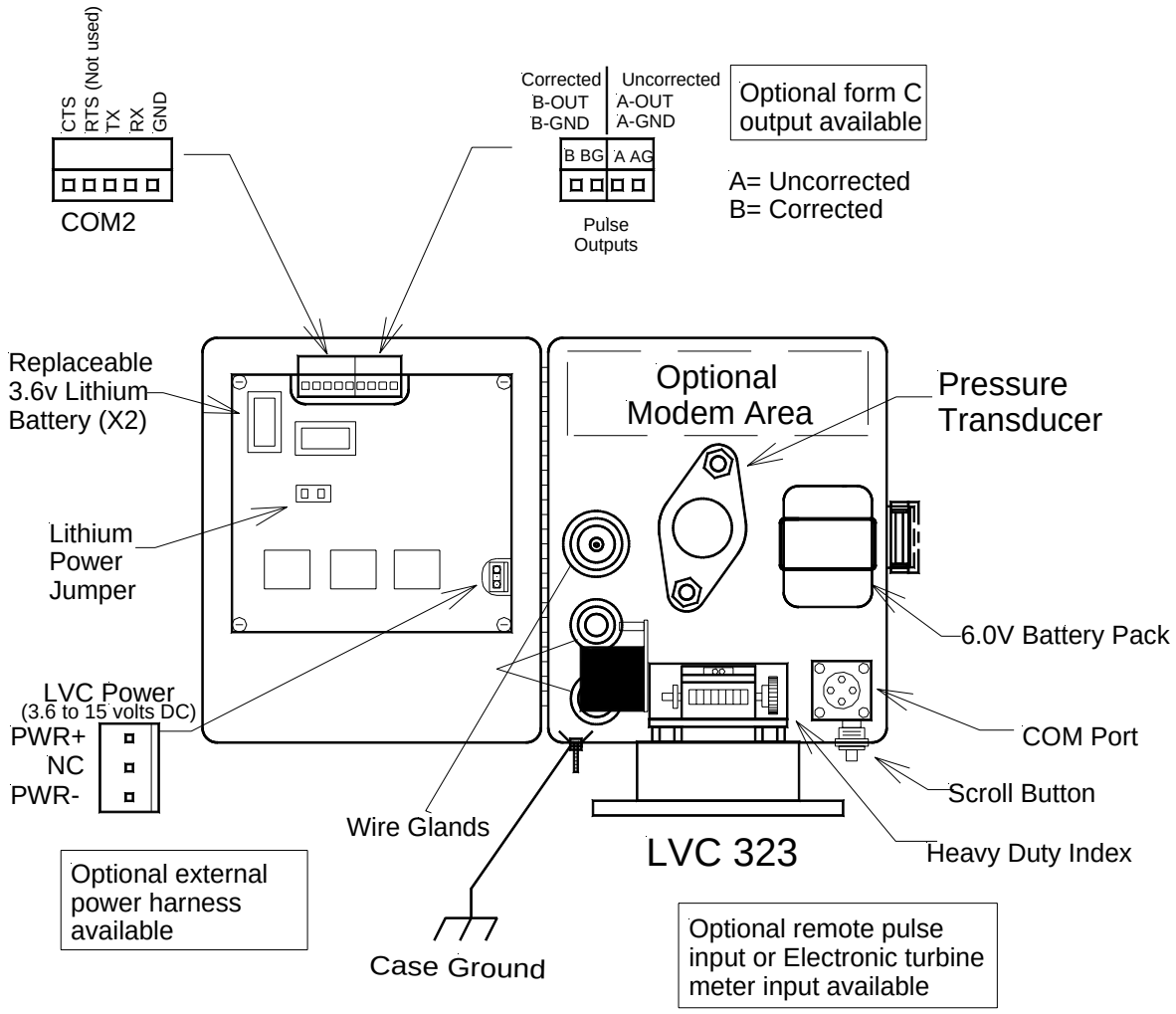

Equipment Required

- Lap Top Computer
- Communications Cable
- Dead Weight Tester or Accurate Pressure Source
- Temperature Reference (If equipped with gas temperature probe.)
- RECOR Mounting Kit (gasket, wrench)
- Mechanics Tool Kit

Mounting / Installation

Matching the Meter Rotation on Heavy Duty Index

The RECOR 323 LVC is equipped with a Heavy Duty Mechanical Index Assembly (replacing the flexible shaft “speedometer cable”). The LVC is suitable for direct mounting on most diaphragm, rotary or turbine meters including, among others, Rockwell, Equimeter, Roots, Romet or American with instrument drives.

When directly mounted to a meter, the user should ensure that the rotation of the LVC matches the rotation of the meter. Unless otherwise specified, the LVC will be shipped suitable for clockwise (CW) rotating meters. The proper rotation can be confirmed by spinning the drive dog on the bottom of the instrument in the direction required by the meter. If the mechanical counter odometer turns in the wrong direction, change rotation. Refer to the drawings below:

Figure 2A

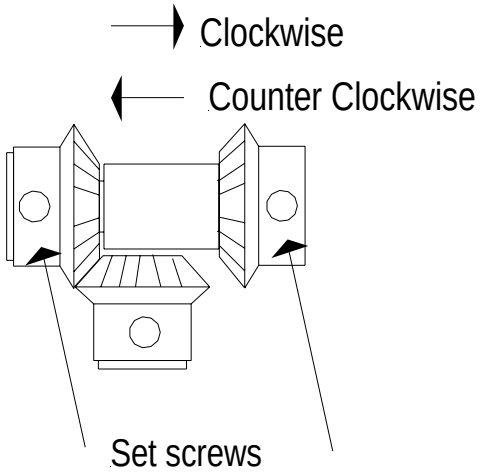

Figure 2B

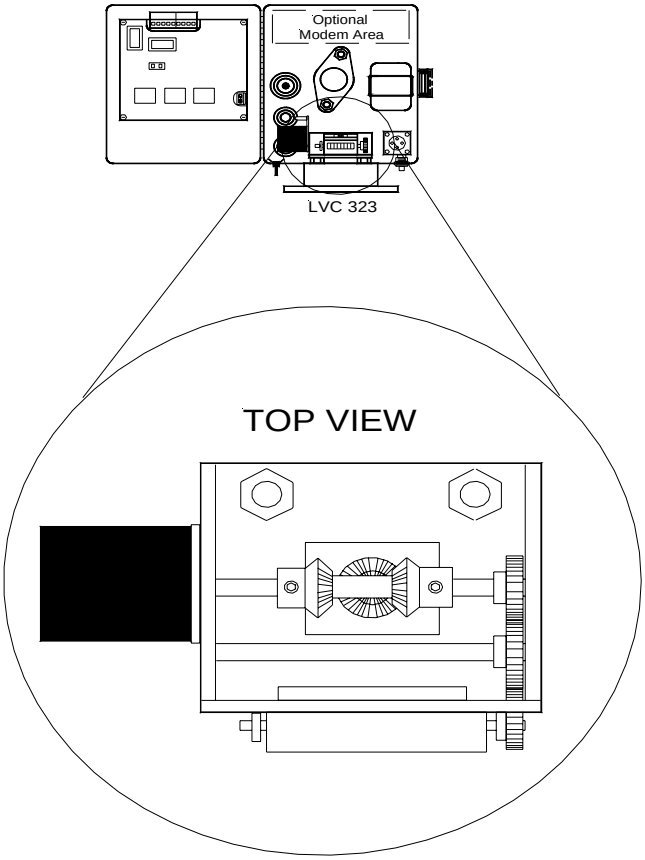

When configuring the RECOR 323 LVC using LVCHOST, all units equipped with the Heavy Duty Mechanical Index Assembly <u>MUST BE CONFIGURED ELECTRONICALLY TO CLOCKWISE</u>, regardless of actual meter rotation.

For more information on converting the unit from flex shaft to the Heavy Duty Index, see the instruction sheets in the Heavy Duty Index Retro Kit.

Meter Mounting

The standard LVC will fit most any mechanical meter instrument drive. Use gasket (provided) between LVC and meter (or pulser) base. Mount on to top of meter while insuring that the LVC drive pin engages properly with the meter (or pulser) drive. Verify meter rotation. Secure the LVC with bolts (not supplied with standard mounting kit) to the meter base. Note: Mounting bolts are included in the large Mounting Kit.

Figure 3

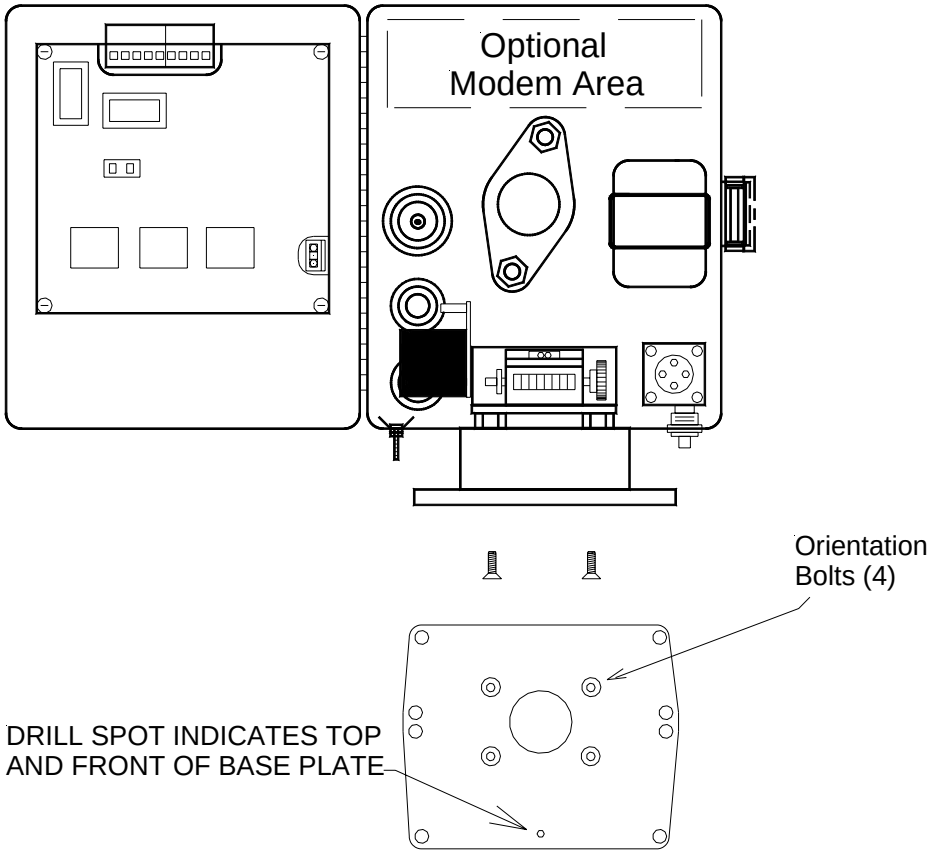

Note: A rotatable base plate allows for user desired orientation of the instrument. The base plate is removed using a 5/32 hex wrench to remove four bolts (see figure 3). The INSTRUMENT may then be re-installed with a different orientation. The base plate MUST maintain its original position and be positioned toward the front of the meter indicated by a drill spot on the top of base plate. CAUTION: TO PREVENT DAMAGE TO THE METER DO NOT CHANGE ORIENTATION OF THE BASE PLATE ON THE METER. ONLY CHANGE ORIENTATION OF THE INSTRUMENT.

Pressure Connection

Connect the pressure (or gas) supply to the 1/4” NPT female connector located on the back of the LVC housing. After piping is complete, check all connections to ensure that no leaks are present. Note: For ease and isolation of testing, the RECOR large mounting kit is recommended. This kit consists of mounting bolts, test plug, an isolation valve, miscellaneous fittings and 1/8" tubing. This kit will assist in future calibrations and inspection while the unit is in service.

Temperature Probe Installation

If equipped, the standard temperature probe (6” x 1/4” OD) should be installed into the appropriately sized thermowell filled with a thermo conductive medium such as glycol or alcohol. Insert the temperature probe into the thermowell through the standard 1/4” inch NPT male gland (provided) until the tip of the probe reaches the bottom of the well. Secure excess armor cable length of the probe.

Figure 4

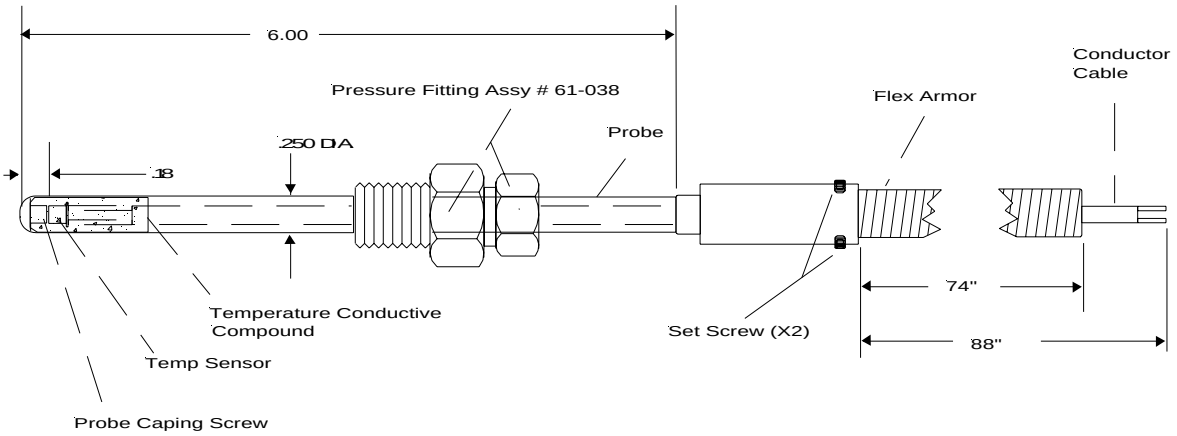

Part No. of Temperature Probe: **61-9634**

Grounding

THE LVC UNIT MUST BE GROUNDED TO MAINTAIN SAFE OPERATION AND WARRANTY.

The groundnut of the LVC (located on the bottom left of the instrument) must be connected to a suitable known external earth ground (usually a dedicated ground rod and NOT AC ground). All of the major components in the LVC are bonded together and connected internally to this groundnut. It is required that grounding be performed, especially when an external modem and/or external power supply (which requires a dedicated ground rod in close proximity to the safe area) is used. All cabling connecting to the LVC must be shielded with all shields tied to case ground.

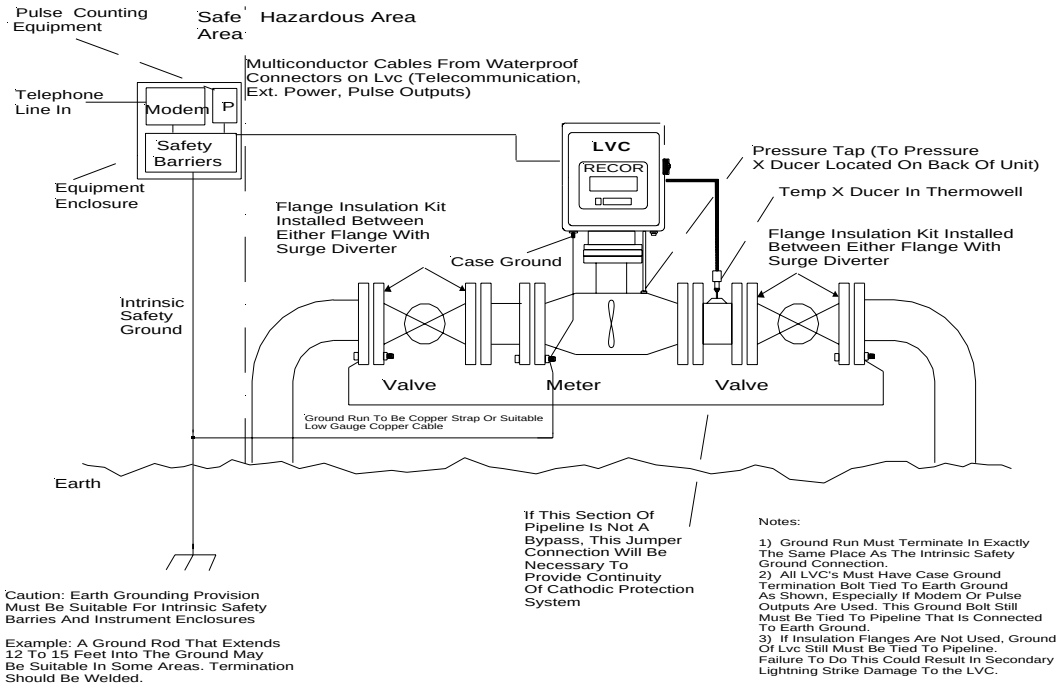

Figure5

For multiple device interconnections (modems, power supplies etc.) the groundnut of the LVC must be tied directly to this same (safe area) ground rod rather than having a separate ground rod of its own. It may be necessary to isolate the portion of the pipe that the LVC is mounted to (with insulating flanges) so as not to disturb the cathodic protection system.

The A.G.A. recommends grounding all electronic field devices to a driven ground rod. This will help protect the device from transients including lightning and power surges on the pipeline.

To reduce the possibility of “secondary” lightning strike damage (damage caused by static electricity fields in the immediate area), the above precautions are required. However, these precautions can not prevent damage to an instrument that receives a “direct” lightning strike.

Battery Pack and Back-up Batteries

The LVC units utilize a 6-volt, encapsulated alkaline pack as its primary power source. The pack supplied with the LVC consists of four AA size batteries and a protection circuit, using 1/8 AMP fuse and diode.

LVC units are shipped from the factory powered and ready to install (unless otherwise specified).

A battery label should be applied to the PC Board shield plate to indicate the install date of the battery pack. This label is supplied with the unit.

The LVC incorporates an on board uninterruptible power supply. This consists of two factory installed ½ “AA” lithium cells rated at 3.6 volts each. These cells are easily replaced in the field.

Normal battery power should be displayed between the ranges of 3.6 - 6.5 volts. The unit will switch to lithium backup when primary power drops below 3.6 volts. Under normal conditions, the battery pack will last approximately four years.

Contact Reynolds Equipment Company for replacement lithium batteries and main battery packs.

External Power

The LVC may be powered by alternative power sources to the main battery pack. These may consist of an AC/DC power supply or solar panel and rechargeable battery properly connected to the Power Connector (see figure 1 for connection). The minimum voltage is 3.6 v to a maximum voltage of 15 volts and minimum of .25 Amps. Class 1 Division 1 sites shall have intrinsic safety barriers**.**

The user is advised to refer to Class 1 Division 1 field drawing on page 20. Class 1 Division 2 sites do not require intrinsic safety barriers.

Note: Reynolds can provide an optional harness to allow external power for main unit and modem (see pg. 21 drawing MTM-313B Part No. 65-9350) or harness for main PCB and have 6 volt main pack as backup. Part No. 61-9315

Consult the National Electric Code publications for all other classifications. Special consideration should also be given to earth grounding provisions on any externally connected device.

Pulse Outputs

Form "A" (Standard)
The LVC is equipped to provide pulse outputs representative of uncorrected and corrected volume. There are two pulse channels available and are designated "A" and "B" (see figure 1). The pulse outputs are two-wire open drain. Pulser A is designated for uncorrected pulse out. Pulser B is designated for corrected pulse out.

Specifications for Pulsers:

Pulse output electrical specification is as follows: Open drain, requires external 1 to 30 volts maximum, 25 ma maximum, 1 K minimum load resistance. Each pulse has a standard fixed pulse width of 62.5 milliseconds with a duty cycle of 50% (62.5 ms on and 62.5 ms off). Note: Firmware version 1.05 and above will allow software configuration of pulse outputs to be set to 1000 ms.

Because of the wide variety of applications requiring connection to the pulse output channels, consideration should be given to the site electrical classification as to the use of intrinsic safety barriers**.** The user is advised to refer to Class 1 Division 1 field drawing on page 20 and consult the National Electric Code publications for all other classifications.

Special consideration should also be given to earth grounding provisions on any externally connected device.

Form "C" PCB (Optional)

This is an optional feature. See the Option insert page 19.

Pulse Isolator (Optional)

This is an optional feature. See the Option insert page 19.

External Modem

The LVC is equipped with two RS232 communication ports (see figure 1). “Com Port 1" is dedicated to local direct communication at 19200 baud using the RECOR “comm cable”. “Com Port 2" is used for connecting a modem. Remote baud rates available are 300, 1200, 2400, 9600 and 19200. When configuring for a remote modem, the “Remote Modem Baud Rate” in the unit must match the “Trained” baud rate of the field modem being used. Note: Com Port 2 must have RX, TX, CTS and GND connected.

When connecting a modem, consideration should be given to the site electrical classification as to the use of intrinsic safety barriers**.** The user is advised to refer to Class 1 Division 1 and Division 2 field drawings on page 20 and 21 then consult the National Electric Code publications for all other classifications. Special consideration should also be given to earth grounding provisions on any externally connected device.

Internal Modem

The LVC may be equipped with an internal modem and phone line surge suppressor. The internal modem is a 2400-baud modem. The modem is pre-configured and pre-wired from the factory, ready for remote communication. If the LVC is equipped with the phone line suppressor, it will be connected directly into the modem’s RJ-11 connector. A 12-volt battery pack (8 “AA” batteries) is supplied, but not connected when shipped. The user must connect prior to remote communication. Assuming one two-minute call per day, everyday, the battery should provide approximately 2 years of service.

The optional phone line surge suppressor is a PN: 64-0321. It is the latest in transient suppression using “Active Matrix” technology. It is a solid state, non-degrading, multi-strike device that responds in nanoseconds but will handle high current at the same time. In the event of a destructive surge, the suppressor will sacrifice itself to protect the equipment. CAUTION: Unit must be connected to proper ground to allow the surge suppressor to operate properly.

To connect a phone line to the modem, insert the phone cable through the larger wire gland on back of case. The cable must be terminated with a RJ-11 connector. Plug into surge protector, if provided; or plug directly to the modem.

An LVC with a modem installed has been UL approved for Class 1 Div. 2. An LVC without a modem is approved for Class 1 Div. 1. If an LVC has been purchased without a modem, it can be retrofitted with a modem at a later date, but must be sent to the factory if the Class 1 Div. 2 UL label is required.
NOTE: U.L. Labels must be placed on instrument by factory.

Host Selection

The Lvc 323 instrument is available with two firmware versions providing different feature sets.

Feature	Version 1.xx	Version 2.xx
Modbus Protocol	**Yes**	**No**
Contract Accumulators	**No**	**Yes**
Contract Alarms	**No**	**Yes**
Schedule Call Host	**No**	**Yes**
Alarm Exception **(for all alarms)**	**No**	**Yes**

Host version 1.22 and version 4.0x are compatible only with instrument firmware versions 1.xx. Instrument versions 2.xx require host version 4.1x.

For more detailed and complete instructions to LVCHost operating software, refer to the extensive online help features incorporated into all versions.

LVCHOST Operating Software 1.22 (DOS Version)

The minimum requirements for the computer running LVCHOST 1.22 is a 386 or higher processor with at least 1 megabyte of RAM and 5 megabytes of available hard drive. NOTE: If no unit is available to connect to, a DEMO Mode is available by typing: C:\LVCHOST\LVCHOST /DEMO in program Target or DOS command.

Software Installation 1.22

Version 1.22 of the LVC software is easily installed on the hard drive of any computer with DOS or Windows 95/98 operating systems. To install LVCHOST perform the following steps:

1. Remove the 3-½ " diskette from its container.
2. Insert the diskette into 3-½ " drive on your computer.
3. Access the disk drive that you have inserted the diskette into (ex: A: <enter> will access A Drive), or use the Windows 3.1 Run command line or Windows 95 Add New Programs utility.
4. Execute the INSTALL program by keying in the following: INSTALL <enter>
5. This will begin the install procedure. User will be prompted and informed by the following:

   Do you wish to install LVCHOST?
   Enter Y or N

   Enter Y to continue INSTALL procedure. Enter N to abort.

6. User will then be prompted as follows:
   Default Drive: directory is C:\LVCHOST
   Do you wish to choose a different
   Drive: directory?
   Enter Y or N

   Enter N if C:\LVCHOST is acceptable. Enter Y if you wish to name a different directory. If you choose Y, a prompt box will appear that requires user to type in the desired directory path. After this, press ENTER to continue.

7. The following messages should then appear:

   - Expanding HOST.EXE
   - Do you wish to install a Windows icon to your desktop? Enter Y or N. Note: Win 3.1 will not automatically install an icon.
   - Installation complete
   - Any key to continue

After installation you may begin using LVCHOST. To execute LVCHOST either double click on the LVCHOST icon from your Windows 95/98 Desktop or from the C:\LVCHOST directory in DOS, type LVCHOST and press ENTER.

LVCHOST utilizes the “cursor” or arrow keys in conjunction with the “enter” and “escape” keys. Values are selected using the “tab” key or by typing in direct from the keyboard.

Online Help 1.22

LVCHOST features on screen help. A help screen may be pulled up from any position within LVCHOST by pressing the F1 (function) key. Once you have completed viewing the help screen press F1 again to return to LVCHOST. Use the help screens as a companion to this manual.

LVChost Operating Software 4.xx (Windows Version)

This install will work in most, Windows 95, ALL Windows 98, and Windows NT (service pack 5) operating systems. If you have a computer that has Win NT Service pack 4 or older, it will need to have an update file named: MDAC_TYPE.EXE executed. This file is a Windows update that Reynolds can provide on CD-ROM at no charge. The Microsoft web page has this update available to download for free also. This file will update ALL necessary drivers in the Windows operating system, if needed. If you have an older system and do not update it with this file, the only problem that might occur will be that the ODBC download will not work (Error message: “Unable to Access ODBC file”).

Otherwise the standard “Flat” file will download as always.

Note: This install must be installed on ***each*** workstation in a network. The data can be sent to a network drive and be shared by other workstations that have LVChost installed on them. Remember to change the “Data Paths” of each workstation to use the same network drive and directory.

DO NOT INSTALL THIS SOFTWARE DIRECTLY ONTO THE NETWORK DRIVE.

Software Installation 4.xx

To install, copy the file “Setup.exe” into a directory and double-click the file to install; or copy the file “Setup.exe” into a directory and go to the “Start” button, then to “Run”, type the location of the directory that you copied the file into. (Example: C:\directory\Setup.exe) and follow the instructions.

Note: LVChost 4.xx requires the screen setting of at least 800 X 600. (Most computers are already set to this setting) Older computers, not set to 800 X 600, will not be able to display all, or some of the screens. The bottom of the screen will sometimes be out of view.

Online Help 4.xx

For more information on using the LvcHost 4.xx software, see the LvcHost 4.xx “Help” file on the software menu.

RECOR LVC Troubleshooting

The following may serve as a quick troubleshooting guide if you encounter problems in operating the LVC 323 Electronic Volume Corrector:

Symptom	**Diagnosis**
Will not log on	1.Verify that direct connect baud rate is 19200 2.Verify that proper com port is selected. (Com 1 is standard on most laptops) 3.If error “Com not ready to send” check to see that only 1 session of LvcHost is running. After correcting problem, you may need to reboot computer and try again. 5.Make sure that “Default Sandia ID“ in “Host Setup” is set to 63. 6.Check Com Cable. 7.Check battery voltage on LCD. 8.Call factory for assistance.
Will not scroll	1.Check battery voltage.

	2.Test scroll switch with ohmmeter. 3.Call factory for assistance.
Display is blank	1.Check battery voltage. 2.Check lithium voltage. 3.Check lithium jumper (Scrape pins with knife to clean if necessary) 4.Restart instrument. Remove and replace batteries and reconnect. (Make sure to send calibration and poly files to unit) 5.Call factory for assistance.
Not responding to applied pressure	1.Confirm pressure mode set to AUTO 2.Check connections of transducer wires. 3.Send original “Calibration file” into the unit and verify calibration. Config column/ Auto Config/ “Restore Instrument” Example filename: 32301234.CFG 4.Replace transducer and recalibrate. 5.Call factory for assistance.
Not responding to temperature	1.Confirm temperature mode is set to AUTO 2.Check connections of temperature probe wires. 3.Send original calibration file into the unit and verify calibration. 4.Retest with a different known good Temperature probe. 5.Call factory for assistance.
Abnormally high accumulator value(s) factors.	1.Check uncorrected, corrected and meter drive Factors are proper. 2.Check harness between index board and main board are tight and proper. 3.Make sure that the index optical switch is operating properly. Go to Display column/ Diagnostics/ “Index Pulse out” and watch arrow go to all four quadrants. 4.Call factory for assistance.

Abnormally low or no accumulator value(s)	1. Check uncorrected, corrected and meter drive factors are proper. 2. Check instrument config to see if Meter rotation is proper (Clockwise or Counter-Clockwise). 3. Set “Meter Speed” to “Fast” (Especially for “cable-driven” indexes. 4. Check to see the index is not binding. 5. Check harness between index board and main board are tight and proper. 6. Replace index harness between index board and main board. 7. Replace optical index pcboard. (See pg. 14 for spare parts serial numbers.) 8. Call factory for assistance.

PERIODIC MAINTENANCE

Annual checks	1. Verify calibration and recalibrate if required. 2. Verify proper battery voltage (3.6 - 6.5 volts). 3. Change batteries if necessary. 4. Lubricate door gasket. 5. Assure that index is operating properly. 6. Check for corrosion at wire terminations.

NOTE: Reynolds recommends annual checks on these instruments.

PLEASE REFERENCE THE BACK COVER OF THIS MANUAL FOR ADDITIONAL INFORMATION WHEN FACTORY ASSISTANCE IS REQUIRED.

Spare Parts/Accessories

DESCRIPTION	PART#
Communication Cable (6'/9pin)	61-0070
323 Battery Pack	61-9070
Spare Internal Modem Battery Pack	61-9370
LVC Temp Probe (6”)	61-9634
Counter Drive Cable	63-0190
Lithium Back-up Battery	65-8000
Telephone Surge Protector	64-0321
Standard 323 LVC Mounting Kit (std)	61-9220
Large 323 LVC Mounting Kit	61-9580
American Meter Adapter Kit	61-2100
Form “C” Output Board	61-9500
Harness for Form ”C” board	61-9310
Optical Interrupt Harness	61-9310

RETRO KITS

HD Index Assembly/10ft (Retro kit)	61-9725
HD Index Assembly/5ft (Retro kit)	61-9722
Internal Modem Assembly Retro Kit) (does not include surge protector)	61-9360
DeBounce Retro Kit	61-9641
Pulse Isolator Board Retro Kit (NERTEC)	61-9512
Form C Board Retro Kit	61-9510

SPARE PC BOARDS

Spare LVC PCBoard	61-9090
Spare Internal/External Modem PCBoard	65-9210
Spare Debounce PCBoard	61-9640
Spare Pulse Isolator PCBoard	61-9501
Spare Form C PC Board	61-9500
Spare Optical Interrupt PCB (Cable drive unit only)	61-9110
Spare Optical Interrupt PCB (Heavy Duty Index only)	61-97-80

Instrument Firmware Version 1.xx Configuration Worksheet

Complete these worksheets prior to leaving the meter shop to facilitate field configuration and documentation**.**

Always remember to download the IOR Report as a record of instrument configuration.

Configuration Version 1.xx

Meter Drive (Input Scale Factor):_____
Uncorrected Volume Display Scale Factor:_____
Leading Digits _____ Leading Blanks:_____
Corrected Volume Display Scale Factor:_____
Leading Digits _____ Leading Blanks:_____
Uncorrected Volume:_____
Corrected Volume:_____

Base Pressure:_____
Zone Pressure:_____
Specific Gravity:_____
Percent Carbon Dioxide:_____
Percent Nitrogen:_____

Wakeup Method:_____
Meter Rotation:_____
Meter Speed:_____
Pressure Reference:_____

Pressure Mode:_____
Temperature Mode:_____
Fpv Mode:_____

Serial Number:_____
Meter Number:_____
Site Address 1:_____
Site Address 2:_____
Site Address 3:_____

High Pressure Alarm Mode:_____
Trip Point:_____
Low Pressure Alarm Mode:_____
Trip Point:_____
High Temperature Alarm Mode:_____
Trip Point:_____

Configuration Version 1.xx (continued)

Low Temperature Alarm Mode:_____
Trip Point:_____
Low Battery Volt Alarm Mode:_____
Trip Point:_____

Out put Pulses:_____
Uncorrected Pulser Scale Factor:_____
Corrected Pulser Scale Factor:_____

Remote Modem Baud Rate:_____

Instrument Firmware Version 2.xx Configuration Worksheet

Complete these worksheets prior to leaving the meter shop to facilitate field configuration and documentation**.**

Always remember to download the IOR Report as a record of instrument configuration.

Configuration Version 2.xx

Meter Drive (Input Scale Factor):_____
Uncorrected Volume Display Scale Factor:_____
Leading Digits _____ Leading Blanks_____
Corrected Volume Display Scale Factor:_____
Leading Digits _____ Leading Blanks_____
Uncorrected Volume:_____
Corrected Volume:_____

Base Pressure:_____
Zone Pressure:_____
Specific Gravity:_____
Percent Carbon Dioxide:_____
Percent Nitrogen:_____

Wakeup Method:_____
Meter Rotation:_____
Meter Speed:_____
Pressure Reference:_____

Pressure Mode:_____
Temperature Mode:_____
Fpv Mode:_____

Serial Number:_____
Meter Number:_____
Site Address 1:_____
Site Address 2:_____
Site Address 3:_____

High Pressure Alarm Mode:_____
Trip Point:_____
Low Pressure Alarm Mode:_____
Trip Point:_____
High Temperature Alarm Mode:_____
Trip Point:_____

Configuration Version 2.xx (continued)

Low Temperature Alarm Mode:_____
Trip Point:_____
Low Battery Volt Alarm Mode:_____
Trip Point:_____
High Contract Month:_____
Trip Point:_____
Warning Contract Month:_____
Trip Point:_____
High Contract Day:_____
Trip Point:_____
Nomination:_____
Allocation:_____
Time Zone:_____
Start of Day Hour:_____
Start of Month Day:_____

Out put Pulses Y/N: _____
Uncorrected Pulser Scale Factor:_____
Corrected Pulser Scale Factor:_____
Output Pulse Rate 8 per sec. / 1 per sec. :_____

Remote Modem Baud Rate:_____
Sandia ID:_____

Scheduled Call Home Y/N :_____
Scheduled Host Number:_____
Alarm Host Number:_____
Modem Init String:_____
Modem Hang Up String:_____

Options and Accessories for the LVC Unit

Pressure Transducer. Contact factory for part number.
The LVC maybe equipped with a wide variety of ranges–most of which are available in either gauge or absolute.

Temperature Probe (Part #61-9634)
Temperature Probes are normally supplied with six-foot metal sheathed cable. Contact factory for non-standard lengths.

- **Turbine Meter Interface (Part #61-9690)**
  Turbine Meters providing analog outputs must be converted to digital outputs to interface the LVC PCB.

- **Debounce Board (Part #61-9640) (available as a Retro Kit Part #61-9641)** is useful when interfacing to external volume measurement devices, which provide pulses.

- **Pulse Isolator Board (also available as a Retro Kit Part #61-9512)**
  This option is used when pulse outputs of the LVC requires electrical isolation as when interfaced to a Nertec pulse counter.

- **Form C Board (Part # 61-9500) (also available as a Retro Kit Part # 61-9510)**
  This is for the purpose of converting the standard two-wire, normally open Form A pulse output to the three-wire Form C output.

Modem
Reynolds industrial modems are available in one of two configurations–internal or external.

(Internal Modem Assembly Retro Kit Part #61-9360) Contact factory for other configurations.

Note: For information on the above options, refer to the documentation sent with the kit.

- **These items will shorten the service life of the LVC 323 main power pack.**

WARNING:
This drawing contains information proprietary to Reynolds Equipment Company. Any reproduction, disclosure, or use of this drawing is expressly prohibited except as Reynolds Equipment Company may otherwise agree in writing.

CLASS I, DIV.1, GROUP D HAZARDOUS AREA
Note 9, 11

SAFE AREA

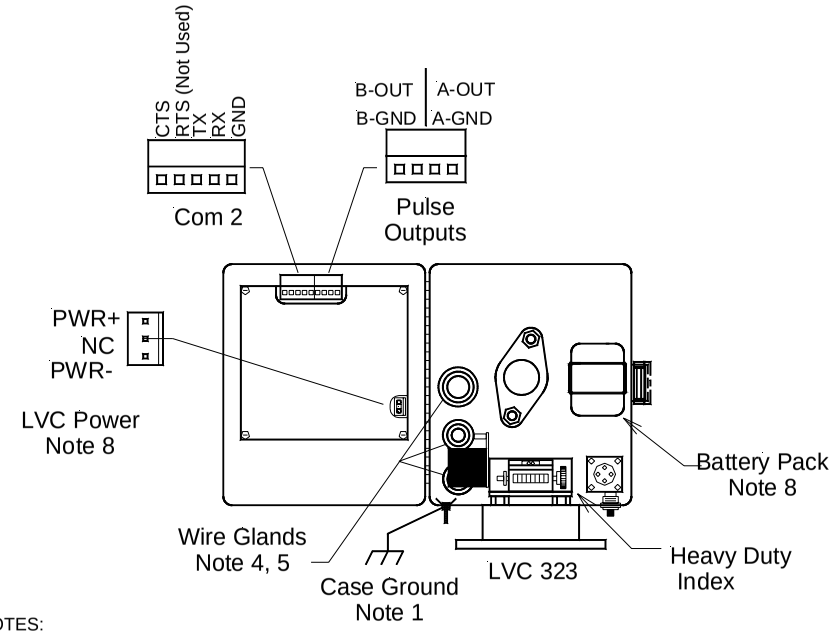

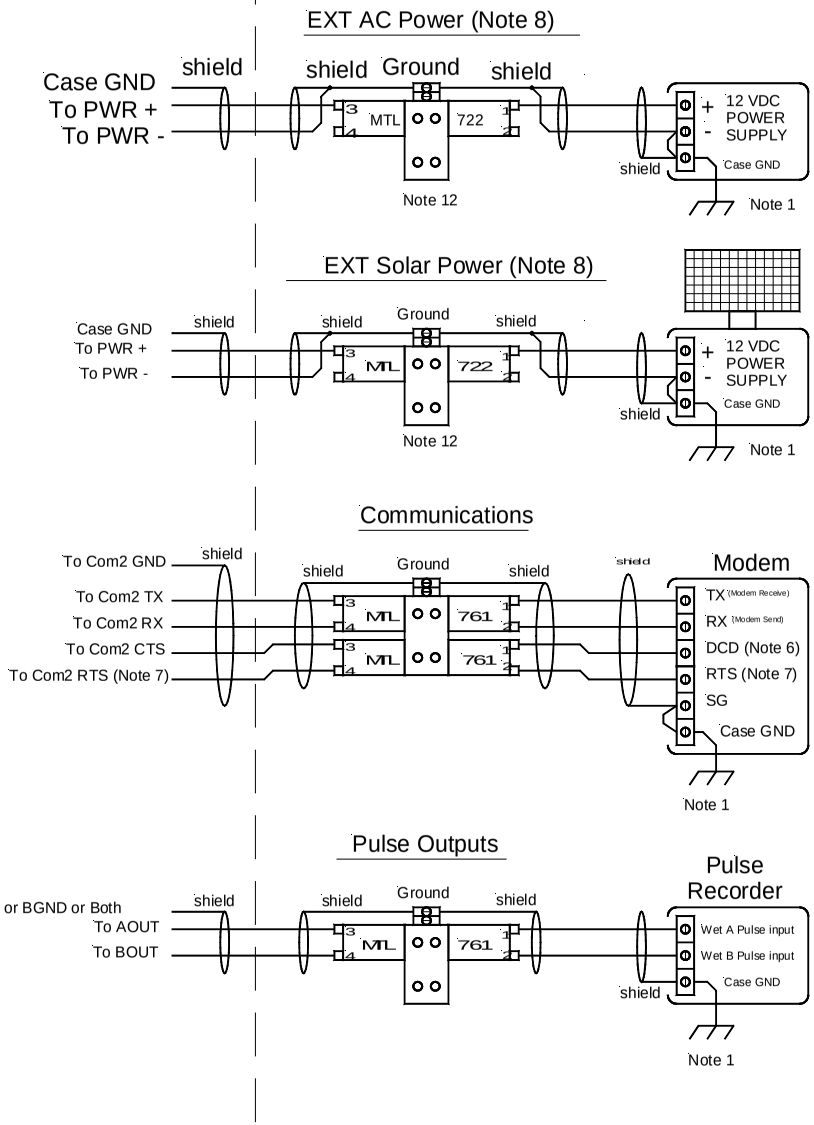

NOTES:

1. All symbols indicate a single external ground.
   The resistance to earth ground must be less than 1 Ohm.
2. Where specified, symbols are shown, indicating use of grounded, shielded cable.
   All shielding penetrating 323 enclosure must be tied to case ground.
3. All unused conductors in multiconductor cables, must be tied to case ground of 323.
4. Multiconductor cable must be selected as follows:
   A) It is required that communication, pulse outputs and ext power functions use different jacketed cables.
   B) All cables must be routed through wire glands.
   C) Use Beldon - or equivlent (single or individual pairs shielded).
5. Wire glands shall accomodate proper wire (or wire buldle) size to ensure a proper weather seal.
6. Modem DCD shall be connected to LVC CTS.
7. RTS may be required by some radio modems nad when not required, may be omitted.
8. The LVC 323 is powered by Reynolds Equipment Battery Pack, Part No. 61-907 or external source.
9. Intrensically safe wiring shall be installed in accordance with Article 504 of the NEC ANSI/NFPA 70 and the Canadian Electrical Code.
10. Peripheral safe area equipment shall not use or generate more than 250 VAC.
11. The maximum cable length between the LVC 323 and barriers is 100 Feet.
12. Barrier models MTL722 or MTL768 shall be used.

Drawn By: Jimmie Curry	Revision Details:	323 I/O INTERCONNECT WIRING DIAGRAM
Checked: Dan Zimmerman	4 May 2000/ J.B.	
Approved:		
Date: 27 Aug 1997		
Revision:		Drawing NO MTM-308C

Reynolds
EQUIPMENT COMPANY
410 KIRBY STREET
GARLAND, TEXAS 75042

WARNING:
This drawing contains information proprietary to Reynolds Equipment Company. Any reproduction, disclosure, or use of this drawing is expressly prohibited except as Reynolds Equipment Company may otherwise agree in writing.

CLASS I, DIV.2, GROUP D ZONE 2 AREA

Note 9

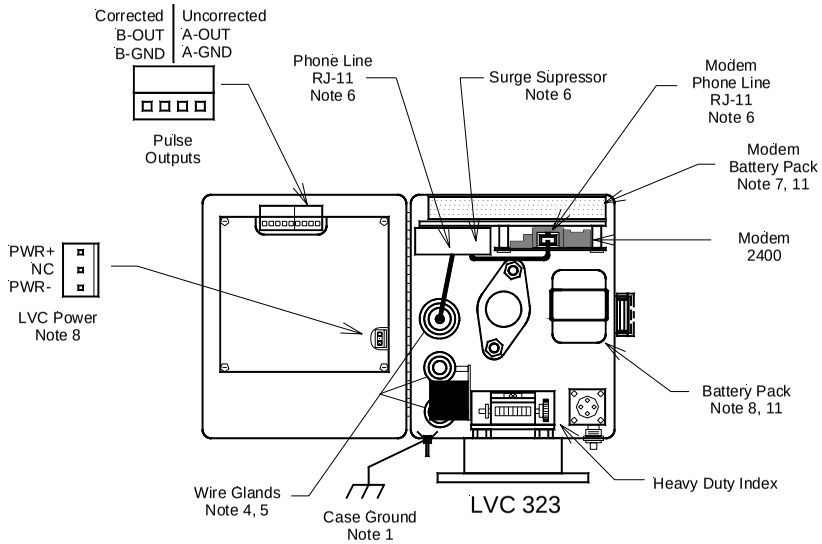

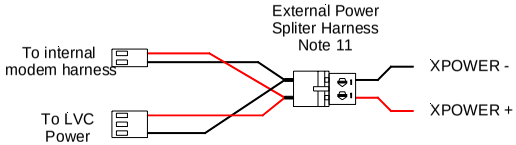

SAFE AREA

External AC Power (Note 8, 11)

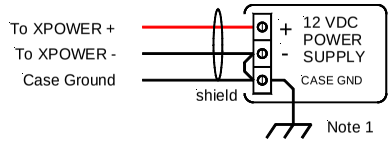

External Solar Power (Note 8, 11)

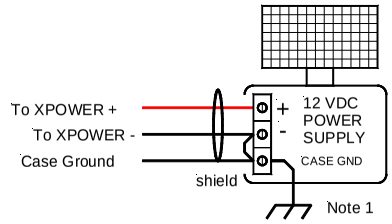

Pulse Outputs

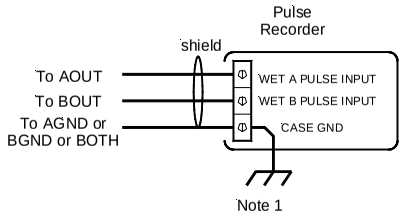

NOTES:

1. All symbols indicate a single external earth ground. The resistance to earth ground must be les than 1 Ohm.
2. Where specified, symbols are shown indicating use of grounded, shielded cable. All shielding penetrating 323 enclosure must be tied to case ground.
3. All unused conductors, in multiconductor cables, must be tied to case ground of the 323.
4. Multiconductor cable must be selected as follows:
   A) It is required that pulse outputs and external power functions use different jacketed cables.
   B) All cables must be routed through wire glands.
   C) Use beldon - or - equivalent (single or individual pairs shielded).
5. Wire glands shall accomodate proper wire (or wire bundle) size to ensure proper weather seal.
6. Surge Protector is optional equipment and when omitted phone line is connected to modem.
7. The modem is powered by Reynolds Equipment Battery Pack, part No. 61-907-5 or external source.
8. The LVC 323 is powered by Reynolds Equipment Battery Pack, part No. 61-907 or external source.
9. Intrinsically safe wiring shall be installed in accordance with ARTICLE 504 OF THE NEC ANSI/NFPA 70 and the Canadian Electrical Code.
10. Peripheral safe area equipment shall not use or generate more than 250 VAC.
11. When using external power, omit internal battery packs and equip Reynolds Equipment Power Spliter Harness, part No. 65-935.

Drawn By: Jimmie Curry	Revision Details:	LVC-323 With Internal Modem	Reynolds EQUIPMENT COMPANY
Checked:	22 Jan. 1998 J.B.		410 KIRBY STREET GARLAND, TEXAS 75042
Approved: 12 Aug. 1997	27 April 2000 J.B.		
Date: 12 Aug. 1997			
Revision:		Drawing NO: MTM-313B	

Factory Consultation

When calling the factory or your area representative for further troubleshooting please have the following information ready:

Customer Information

1. Name(s)
2. Company
3. Phone Number(s)
4. Location (site I.D.)

Hardware Information

1. Instrument Serial Number
2. Transducer Serial Number
3. Date of Manufacture
4. Model
5. Instrument Software Version
6. Battery Voltage
7. Connected Devices (e.g. pulse receivers, modems power supplies, other)
8. Phone Number If Applicable
9. Most Recent Printed IOR Report

For Service Call

REYNOLDS EQUIPMENT COMPANY
3233 W. Kingsley Rd.
GARLAND, TEXAS 75041
TEL 469-429-5280 FAX 469-429-5281
1-800-775-3424