LOW FREQUENCY INPUT CARD
(DEBOUNCE CIRCUIT)
MODEL NO. DB1

FOR USE IN
RECOR 323 LVC VOLUME CORRECTORS

ADDENDUM TO USERS MANUAL

REYNOLDS EQUIPMENT COMPANY
3233 W. KINGSLEY RD.
GARLAND, TEXAS 75041
TEL 469-429-5280
FAX 469-429-5281
RevB.111804

LOW FREQUENCY INPUT CARD
(DEBOUNCE CIRCUIT)
MODEL NO. DB1

FOR USE IN
RECOR 323 LVC VOLUME CORRECTORS

1.0 DESCRIPTION

The optional DB1 low frequency input card (PN61-9640) is required for connecting the RECOR 323 LVC electronic volume corrector to external uncorrected volume pulse sources. The card replaces the standard optical input system.

2.0 INSTALLATION

The DB1 card replaces the standard optical input system that consists of the infrared detector/emitter card and the interrupt disk. The DB1 is secured to it's own mounting plate which fits the same bolt pattern for the optical system. Both the optical system and the DB1 share the same factory wiring harness.

Since the DB1 assumes the use of an externally sourced uncorrected volume pulse the standard universal meter mounting plate is not used. Instead the factory DB1 equipped LVC's will require a "universal" mounting bracket which keys up with the pedestal screw hole pattern. The bracket will allow pipe or wall mounting.

When installing the DB1 equipped LVC, refer to the LVC manual for proper earth grounding instructions.

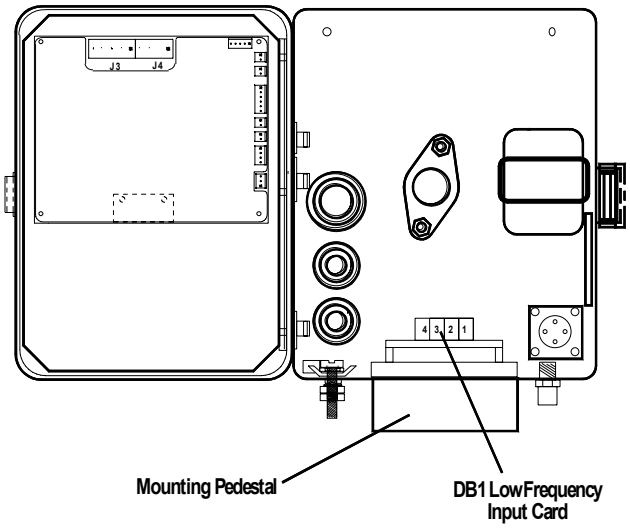

RECOR 323 LVC

3.0 CONNECTING TO EXTERNAL PULSE DEVICES

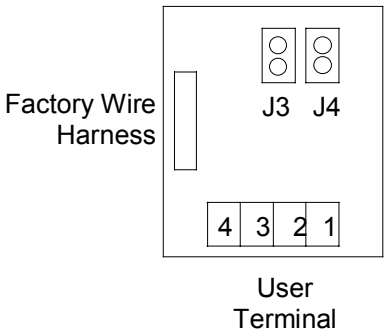

The DB1 accommodates single reed or dual reed inputs.

NOTE: Use of shielded cable is recommended

For single reed connect to positions 3 and 4 on the user terminal

For dual reed connect one pair to 3 and 4 and the second pair to 1 and 2 on the user terminal

4.0 HARDWARE CONFIGURATION

A two-position shunt (jumper) is provided. Use only for dual reed operation.

For dual reed input place shunt across jumper pins J3. J4 is unused.

5.0 SOFTWARE CONFIGURATION

To ensure proper operation the LVC must be properly configured for the DB1.

1. Set input scale factor to match meter drive rate (uncorrected pulse value)
2. Set to clockwise rotation
3. Set to fast.

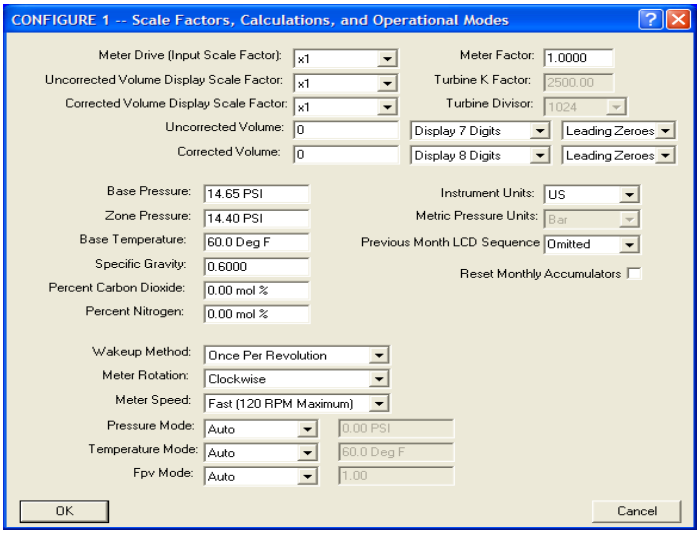

6.0 EFFECT ON LVC BATTERY LIFE

An LVC equipped with the DB1 card can expect to reduce the standard battery pack life by one half to approximately two years.

7.0 ELECTRICAL CONSIDERATIONS

In order to maintain intrinsic safety, ensure that pulses connected to the LVC through the DB1 are isolated dry contacts closures. Wetted pulses are not suitable for direct connection to the DB1 and must be introduced through energy limiting intrinsic safety repeater relay barriers.

8.0 SPECIFICATIONS

Dual reed must be phased 90’ minimum
Input limited to dry contact
Minimum input duration: 500 micro seconds
Maximum pulse frequency: 160 pps - 100 divisor, 1.6 pps - 1 to 1
Typical current requirements: 42 micro amps